FABRIQUES DE TABAC REUNIES S.A.

RESEARCH AND DEVELOPMENT

MONTHLY REPORT

Strictly Confidential

MARCH 1982

Distribution :

A	Messrs.	H. Maxwell (2)	A	W. Fink
		R.W. Murray		H. Friedrich
		J. Gibson		H. Gaisch
		G. Karandjoulis		W. Gannon
		P. Stolt		J. Guyot
		H. Böckle		F. Lopes
		J.B. Boder		J. Mandiratta
		M. Bourlas		I. Marcovitch
		D.O. Clark		U. Nyffeler
				D. Schulthess
B		H. Brugger	B	P. Francis
		D.R. Gatland		A. Read
		H. Schildwächter		W. Tessendorf
		E. Stoop		W. Tschudin
		D. Zelkowitz		G. Voelkl
		H. Fauville		E. Grossen
C		W.G. Lloyd	C	[redacted]
		F.E. Resnik		W.A. Farone
		R.B. Seligman		L. Turano
		M. Häusermann		L.F. Meyer
D		W. Grünbaum	E	A. Peier
				R. Suter

1000143782

Source: https://www.industrydocuments.ucsf.edu/docs/gjxk0000

LIST OF SUBJECTS COVERED

I. RESEARCH

1. Special Events
2. Biotechnology
3. Chemical and Analytical Services
4. Special Projects

II. PROCESS DEVELOPMENT

5. Nitrate Reduction
6. Pilot Plant Operations
7. Reconstituted Tobacco
8. Unit Operations
9. Special Projects

III. PRODUCT DEVELOPMENT AND QUALITY ASSURANCE

10. Cigarette Development
11. Product Development Laboratory
12. Material Development
13. Tobacco Studies
14. Flavour Development
15. Material Testing
16. Cigarette and Smoke Analysis
17. Q.A. Analytical Services
18. Special Projects

IV. MISCELLANEOUS

19. Specifications
20. Process Assurance
21. Computer and Instrumentation Support Group
22. Documentation and Library
23. Patents
24. Legislation

Key to Distribution:

A. Complete Report
B. All except Research Report
C. All except Special Projects Research and those reports which might interfere with patent considerations
D. Subject No 9, 12, 15, 17, 18, 19, 21, 24
E. Subject No 10, 12, 15, 17, 19, 21

0001143783

Source: https://www.industrydocuments.ucsf.edu/docs/gjxk0000

TABLE OF CONTENTS

Subject	Title	Author	Page
2	Biotechnology	Berney-J.	1
3	Rosa	Murray-M.	2
	Fiat	Genoud-Y.	4
	Heat	Piadé-J.-J.	5
	Agricultural Chemicals	Speck-M.	6
	Analytical Investigations	Murray-M. Piadé-J.-J. Genoud-Y. Lecoultre-Y. Moser-F.	7
5	Nitrate-Reduction by Controlled Fermentation	Ruf-C.	13
6	Pilot-Plant Operations	Lüthi-N.	14
13	Tobacco Studies	Joseph-L.	15
15	Material Testing	Balliger-P.	23
16	Cigarette and Smoke Analysis	Senehi-F.	25
17	QA Analytical Services	Widmer-A.	27
21	Computer and Instrumentation Support Group	Thévoz-M.	29
22	Library 3	Badstuber-A.	30
24	Legislation	Fink-W.	31

1000143784

Source: https://www.industrydocuments.ucsf.edu/docs/gjxk0000

PROJECT TITLE : BIOTECHNOLOGY

PERIOD COVERED : FEBRUARY - MARCH 1982

WRITTEN BY : Berney-J. (JBE)

NATURALLY OCCURRING DENITRIFICATION

Two strains were isolated from the freeze-dryed culture ATCC 1. The culture was able to be maintained on agar slants and was sent out for identification. In each of two lyophilisates, one of which had been produced in April 1981 and the other in January 1982, the 2 strains could be found.

ALTERNATIVE STRAIN FOR LEAR

Candida berthetii CBS 5452 was found to denitrate Burley strip extracts in a more efficient way than Candida utilis NCYC 707. Up till now with a 1 : 15 extract (Burley strip : water) a dilution rate of 0.26 hr^{-1} has been achieved. Lactic acid was used for maintaining the pH and glucose was added at a level of 26 g per 1 g Nitrogen ($N-NH_3$ + $N - NO_3$). The maximum dilution rate will be determined. Most probably it is situated between 0.3 and 0.35 hr^{-1}.

Up till now with a 1 : 10 extract (Burley strip : water) a dilution rate of 0.15 hr^{-1} has been achieved. This value is twice as high as those obtained with Candida utilis NCYC 707. It is certainly possible to speed up this dilution rate. Its maximal value is presently being determined.

J. Berney

JBE/jig/MARCH 22, 1982

1000143785

Source: https://www.industrydocuments.ucsf.edu/docs/gjxk0000

PROJECT TITLE : ROSA

PERIOD COVERED : OCTOBER 17 - MARCH 17, 1982

WRITTEN BY : Murray-M. (MUM)

The effect of nitrosation inhibitors on the cigarette sidestream smoke nitrosamine delivery (DMN/NPY + tobacco specific nitrosamines) was investigated (1). Nine different inhibitors were tested as filler additives. The additives used are shown in Table 1. Cigarettes used were hand made from Burley ØS-B-Bu tobacco (Project SPOTLESS).

The results of the investigations, calculated on a ng/puff basis, were positive in the case of urea, sugars (glucose, sucrose, fructose 1 : 1 : 1 cocktail) and cysteine. Further work is under way to confirm this finding.

REFERENCE

(1) Murray-M., PME Monthly Progress Report, June 1981.

MUM/jig/MARCH 22, 1982

ϕ0001437786

Source: https://www.industrydocuments.ucsf.edu/docs/gjxk0000

TABLE 1

ADDITIVES	APPLICATION LEVEL
Reducing sugar cocktail	0, 5, 10, 15g/100g tob.
Sorbic acid	10, 25, 50mg/cig.
Sorbic acid + potassium sorbate (50 : 50)	10, 25, 50mg/cig.
Vanillin	10, 25, 50mg/cig.
Butylated hydroxy anisole	(BHA) 10, 25 50mg/cig.
Butylated hydroxy toluene	(BHT) 10, 25, 50mg/cig.
Potassium bisulfite	10, 25, 50mg/cig.
Cysteine	10, 25, 50mg/cig.
Urea	0, 3, 5, 7, 10g/100g tob.

0001437 87

Source: https://www.industrydocuments.ucsf.edu/docs/gjxk0000

PROJECT TITLE : FIAT

PERIOD COVERED : JANUARY 15 - MARCH 15, 1982

WRITTEN BY : Genoud-Y. (YVG)

The object of Project FIAT is to establish a method to determine the retention of certain components of cigarette smoke by filters, filter additives and adsorbents.

SCREENING OF ADSORBENTS

The previously described apparatus (1) was set-up and preliminary tests were performed to optimize operating parameters.

For each adsorbent, adsorption and desorption profiles are being obtained for selected organic compounds. A first selection of adsorbents should be achieved on this basis.

GAS-PHASE ANALYSIS ON FUSED SILICA CAPILLARY COLUMNS (FSCC)

The work is continuing in order to find an applicable stationary phase in FSCC which could be used for gas-phase analysis. The advantages of such a column for the FIAT project are a decreased analysis time and improved accuracy (due to lower specific absorption in the column).

REFERENCE

(1) Genoud-Y., PME Monthly Progress Report, October 1981, p 12.

YVG/jig/MARCH 23, 1982

0001437788

Source: https://www.industrydocuments.ucsf.edu/docs/gjxk0000

PROJECT TITLE : HEAT

PERIOD COVERED : FEBRUARY 16 - MARCH 15, 1982

WRITTEN BY : Piadé-J.-J. (JJP)

Various grades of selected Burley tobaccos (1) were sprayed with aqueous solutions of glucose and heat treated in cylinders in order to test possible flavour modification by enhancement of Maillard reactions.

REFERENCE

(1) Piadé-J.-J., PME Monthly Progress Report February 1982.

JJP/jig/MARCH 25, 1982

0001143789

Source: https://www.industrydocuments.ucsf.edu/docs/gjxk0000

PROJECT TITLE : AGRICULTURAL CHEMICALS

PERIOD COVERED : JANUARY 15 - MARCH 3, 1982

WRITTEN BY : Speck-M.

ROUTINE PESTICIDE ANALYSES

The following samples were analysed for pesticide residues during the period from January to March 1982 :

Organochlorines	53
Organophosphorus	51
Methamidophos	5
Dithiocarbamates	49
Maleic Hydrazide	43
Ridomil	13

NEW ANALYTICAL METHODS

Maleic Hydrazide

Work on quantitation of maleic hydrazide by GC has been continued (1). Experiments with different extraction and derivatization conditions were carried out to improve the overall recovery and the reproducibility of the method.

The latest experiments with MH-free tobacco spiked with 34.5 ppm and with 17.2 ppm MH gave a mean recovery of respectively 36% (single values : 25.5, 45.4, 37.9, 37.1, 39.1, 30.4%) and 35% (single values : 31.4, 39.8, 29.1, 35.9, 35.9, 35.2%) and a relative standard deviation of 20 and 11% respectively.

The detection limit of the GC method is approximately 5 ppm, and that of the photometric method approximately 10 ppm. The recommended tolerance level is 80 ppm.

Experiments to improve the reproducibility will be continued.

REFERENCE

(1) Speck-M., PME Monthly Progress Report, June 1981.

MS/jig/MARCH 24, 1982

0001143790

Source: https://www.industrydocuments.ucsf.edu/docs/gjxk0000

PROJECT TITLE : ANALYTICAL INVESTIGATIONS

PERIOD COVERED : FEBRUARY 22 - MARCH 17, 1982

WRITTEN BY : Murray-M. (MUM), Piadé-J.-J. (JJP), Genoud-Y. (YVG), Lecoultre-E. (ETL), Moser-F. (FMO).

METHOD DEVELOPMENT

New Extraction Method (YVG)

In order to improve product characterization, a new extraction method was investigated. The method was previously presented to obtain quantitative essential oil extraction of flowers and hops (1).

The method is based on azeotropic steam distillation in conjunction with continuous extraction using a small and constant amount of a water-immiscible solvent (minimum volume of 1.0 ml) possibly containing a suitable internal standard. The new extraction procedure avoids the loss of compounds associated with solvent drying and concentration steps inherent to usual extraction techniques.

Figure 1 shows the micro steam-distillation-extraction apparatus used. The sample (liquid or solid) is placed together with water in flask A, the organic solvent (density > water) in flask B. Dichloromethane was chosen as an organic solvent for our experiments. Both flasks were heated and the water and dichloromethane refluxed. Sample components were steam-distilled from A to C and extracted from the vapour phase and the liquid phase by the organic solvent. Depending on the sample size the extraction time was between 1 and 1.5 hours. The concentrated extract can be used directly for GC or GC/MS analysis.

In the context of trouble-shooting problems, several applications were investigated: profiling of tobacco flavours (Fig. 2), profiling of components in RL samples of different quality (Fig. 3) and characterization of cigarette supplies (inks, varnishes, tipping paper).

A PME Analytical Method is presently being written.

Fatty Acid Analysis

- A GC method for the analysis of acetic, propionic and butyric acid in NOD samples by direct sample injection after dilution of the samples and addition of an internal standard was developed (ETL).

- The recovery of acetic, propionic and butyric acid on steam distillation from liquid samples was checked using (^{14}C) acetic, propionic and butyric acid.

1000143791

Source: https://www.industrydocuments.ucsf.edu/docs/gjxk0000

Recoveries were improved to > 90% by addition of inorganic salts (MUM).

Nicotine Analysis

A simple method for the quantitation of nicotine in tobacco samples by GC^2 headspace was worked out (FMO).

SERVICE FOR OTHER GROUPS

- HPLC monitoring of lactic acid in tobacco extracts was re-checked and the method applied to the analysis of 17 RL samples of Project TASK (JJP).

- Lactic and sorbic acid content of another 40 RL samples is presently being determined by HPLC (JJP).

- NO was simultaneously determined in the mainstream and sidestream smoke of 4 experimental cigarettes submitted by Biotechnology. (JJP) (2).

- Headspace analyses were carried out on 9 MFUK and UK2FI flavour samples at the request of QC (FMO) (3) (4).

- 7 cigarette samples (5) and 40 RL samples of Project TASK were analysed by GC^2 for carboxylic acid content (ETL).

- 3 Merit and 2 MLF cigarette samples were analysed by headspace and by GC^2 for fatty acids at the request of Product Development (ETL/FMO) (6) (7).

- 7 Leaf tobacco samples were analysed for minor tobacco alcaloids at the request of SOTA (FMO) (8).

- Several triacetin samples were analysed for QC by GC^2 (YVG).

- Phosphate/sulfate determinations were performed on 14 RL and RCB samples at the request of Product Development (ETL).

- The SH index of 16 TLA cigarette samples was determined (MUM).

REFERENCES

(1) Godefroot-M. et al., J. Chromatography 203 (1981) 325.
(2) Memo from Piadé-J.-J. to Bindler-G., March 18, 1982.
(3) Memo from Bogers-A.-W. to Boder-J.-B., March 17, 1982.
(4) Memo from Fink-W. to Lopes-F., March 17, 1982.
(5) Memo from Murray-M. to Fink-W., March 16, 1982.
(6) Memo from Nagel-P. to Murray-M., March 10, 1982.
(7) Memo from Murray-M. to Nagel-P. and Fink-W., March 16, 1982.
(8) Letter from Corbaz-R. to Moser-F., February 9, 1982.

WAF/jig/MARCH 24, 1982

0001143792

Source: https://www.industrydocuments.ucsf.edu/docs/gjxk0000

FIGURE 1

Micro steam distillation-solvent-extraction apparatus.

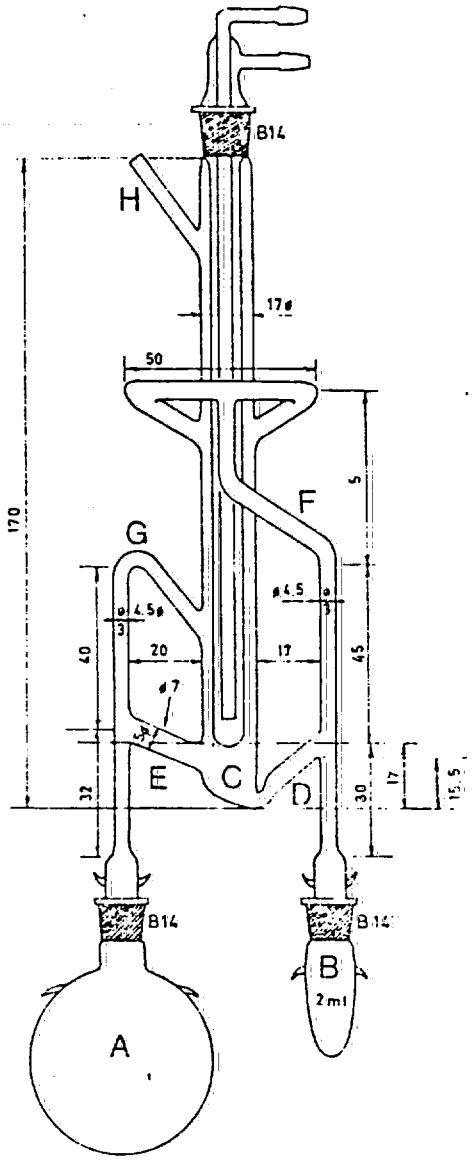

0001437793

Source: https://www.industrydocuments.ucsf.edu/docs/gjxk0000

FIGURE 2

Comparison of four types of tobacco by GC^2/micro-steam distillation-extraction.

Amount tobacco extracted : 14g; organic solvent: CH_2Cl_2; extraction time: 1.5hrs.

Chromatographic conditions : Fused silica capillary column 25m x 0.3mm, Superox 0.1; temperature 60° - 200°C.

0001437794

Source: https://www.industrydocuments.ucsf.edu/docs/gjxk0000

7

0000143795

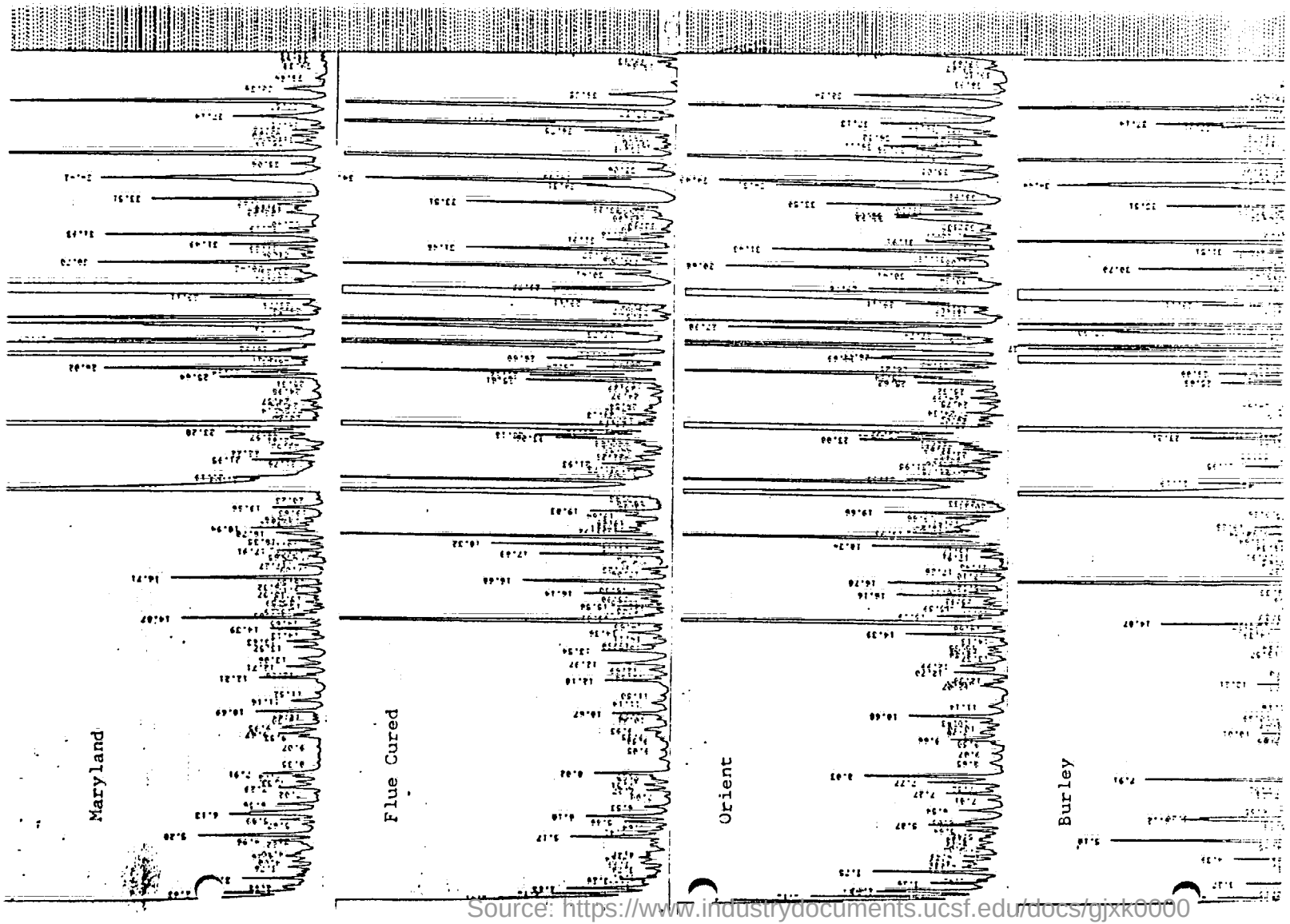

Source: https://www.industrydocuments.ucsf.edu/docs/gjxk0000

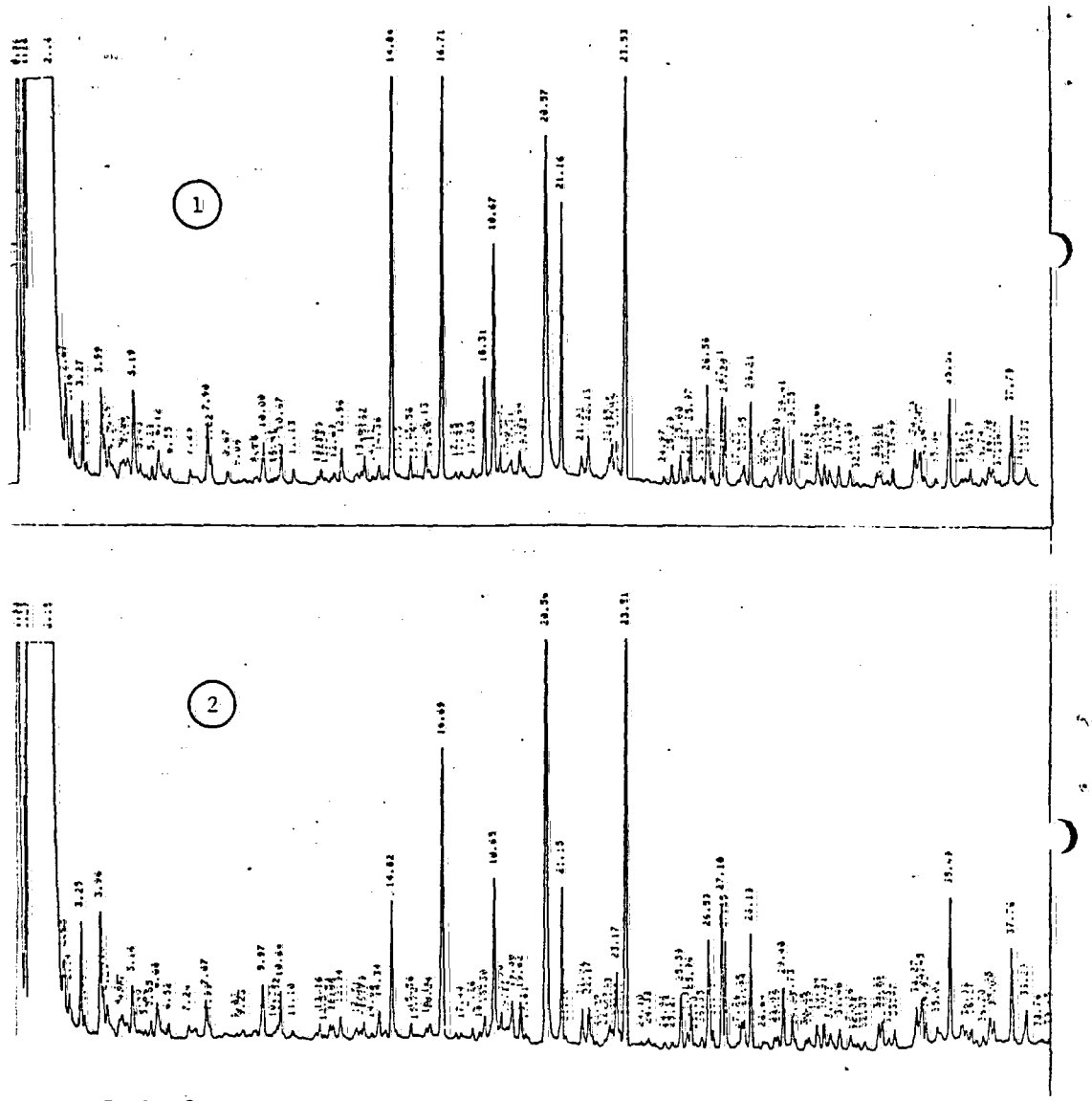

FIGURE 3

Gas chromatogram (GC^2) of extracts obtained by micro steam distillation-solvent-extraction of accepted (1) and rejected (2) RL samples.

Amount RL extracted : 9g; organic solvent : CH_2Cl_2; extraction time; 1.5hr.

Chromatographic conditions as for Figure 2.

0001143796

Source: https://www.industrydocuments.ucsf.edu/docs/gjxk0000

PROJECT TITLE : NITRATE-REDUCTION BY CONTROLLED FERMENTATION

PERIOD COVERED : FEBRUARY 25 - MARCH 26 1982

WRITTEN BY : Ruf-C. (CLR)

No work was done on the project LEAR during this period, as the staff and equipment were involved with trials for the project NOD (naturally-occurring denitrification) under the supervision of J. Baniasz.

CLR/sde/MARCH 26 1982

0001143797

Source: https://www.industrydocuments.ucsf.edu/docs/gjxk0000

PROJECT TITLE : PILOT-PLANT OPERATIONS

PERIOD COVERED : FEBRUARY 24 - MARCH 23 1982

WRITTEN BY : Lüthi-N. (NIL)

---

1. EQUIPMENT

1.1. Rotocell Extractor

The continuous feeding system had to be modified because problems were again observed especially when using RL feedstock for the NOD (naturally-occurring denitrification) process. The modification gives satisfactory results but it still requires additional supervision by the operators.
A make-shift system was installed at the tobacco inlet of the extractor to reduce the losses of evaporated water when extraction takes place at 80°C.

1.2. Feeding System for the 750-l Fermentor

The installation of the two dosing pumps for feeding the extract and the ingredients in the right proportions into the 750-l fermentor is nearly finished.

1.3. Drying Chamber

The purchased drying chamber arrived on March 8 and was installed. During the start-up phase, problems were observed with the ventilator for circulating air in the drying chamber.
With the assistance of a technician from Quester, the turbine of the ventilator was replaced but it is still not working to our satisfaction.
Therefore it was decided to send the complete ventilator back to the supplier for checking.

NIL/sde/MARCH 24 1982

U. Lüthi

0000143798

Source: https://www.industrydocuments.ucsf.edu/docs/gjxk0000

PROJECT TITLE : TOBACCO STUDIES

PERIOD COVERED : JANUARY 27, 1982 - MARCH 25, 1982

WRITTEN BY : Joseph-L. (LIJ)

TOBACCO LOT ANALYSES

Zambia MD Tobacco (1)

In order to find other sources of supply for MD tobacco, three lots of Zambia MD tobacco were ordered (lots 2180, 2181, 2182). Each lot was separated into four grades. The TLA analyses show that these lots have a lower NO_3-N content (between 0.00 and 0.09%) and therefore a lower NO delivery (between 0.02 and 0.16 mg/g of burnt tobacco), lower NH_3-N level (between 0.08 and 0.18%), lower TA content (between 0.46 and 1.15%) and SN delivery (between 0.79 and 2.01 mg/g of burnt tobacco) than the other US and IT MD tobaccos. The filling power and the other smoke parameters are similar to US MD tobacco.

RL-150 B/RLC (2)

The TLA analyses of a special shipment of RL-150 B (lot 9758) and RLC (lot 9760) were made. These lots were used in the different steps of the PACIFIC project. The analyses show that the RLC, compared with the RL-150 B at the same level of TA and NO_3-N, has lower NO and SN deliveries per gram of burnt tobacco and lower DPM, CO and HCN deliveries (see table 1).

In a 100% cut sheet cigarette at constant compressibility RLC can save about 90 mg of sheet per cigarette (at the same level of moisture content, see graph 1).

RLC, Lot 9695 (3)

The TLA analyses of the first shipment of RLC showed some irregularities in the phosphate and NH_3-N analyses and in the colour of the sample. After confirmation of these analyses and after a visual examination of this lot by the leaf experts, it seems that one of the hogsheads of this lot contains RL-150 B and was sent with the RLC.

0001143799

Source: https://www.industrydocuments.ucsf.edu/docs/gjxk0000

Nigerian Tobacco (4)

We have received six samples from Nigeria; the TLA analyses are under way.

Stems (lot 7903)

A special sample of cut stems from lot 7903 was taken in the primary after the gas dryer (18% m.c.) and was dried in the laboratory (10 ∿ 12% m.c.). The analyses are under way.

CH Tobacco (5)

A first series of fourteen lots is currently under analysis.

Sampling Procedure (6)

In order to check the ETNA and IS production, a procedure for TLA samples has been set up for the ETNA and IS lines in Munich. A similar procedure will be established for ETNA in Berlin and PMH.

ASSISTANCE TO OTHER PROJECTS

Reference Cigarettes

Fourteen reference cigarettes were made during this period for the projects PACIFIC, DOWN, COMMONWEALTH 4, COMMONWEALTH 9, and VIEJO.

Basic Blend ATO

A TLA analysis was carried out for the project DOWN on the basic blend for ATO; the quality of the strips was poor (a high percentage of scraps).

SYPP (Smoke Yield Prediction Program)

Simulations were carried out on the basis of different recipes of new blends of the projects VIEJO and INGE.

Project LEAR

A TLA analysis was made on one sample of a Burley strips' blend (control). The analyses are under way.

0001143800

Source: https://www.industrydocuments.ucsf.edu/docs/gjxk0000

EXPANDED TOBACCO

Project LIBRARY

The TLA analyses of the non-expanded and expanded MW tobacco samples are under way.

Expansion trials in Onnens

TLA were made with two samples (expanded and non-expanded tobacco) for the Process Development Department.

Expanded Burley (7)

A TLA was made on lot 9Ø1 of expanded Burley tobacco. The analyses are under way.

PACIFIC (8)

Objective

The objective of this project is the study of the introduction of RLC.

Description of samples and results

Nine different blends were processed in the primary. These blends were treated in conformity with the processing specifications of MLF. The first one was the normal MLF blend, the other blends combined the progressive introduction of the RLC replacing RL-150B with the increase in the ET-FC. The last two blends were the MLF '83' blend (similar to the MLZ blend), one with RLC and the other with RL-150 B.

Three prototypes were produced with each blend using Accu-Ray, and with the MLF specifications for the format and the cigarette materials. The first prototype was made with the specified MLF tobacco weight, the other two with 40 mg more and 40 mg less tobacco.

The analytical results of all the prototypes at the specified MLF weight were consistent with the usual MLF results (see table 2).

A difference test was organised in Lausanne with some people from Richmond and from the Leaf Department of Lausanne. The results of this Panel were very satisfactory concerning the good acceptability of the last step (9).

0000143801

Source: https://www.industrydocuments.ucsf.edu/docs/gjxk0000

PROJECT WEIGHTWATCHER (10)

Objective

This study was initiated in order to determine the relationship between tobacco weight/RTD of the tobacco rod and the smoke deliveries.

Overview

Nine boxes of filters were checked and selected by FTR QA with regard to the RTD filter weight and diameter. This was done in order to have a minimum of filter variations in the cigarettes.

At this time eighteen trays of cigarettes were produced with TLA specifications and with a MLF blend. The tobacco weight range of the cigarettes is from ∿ 650 to ∿ 1000 mg/cig.

MICELLANEOUS

SYPP

Assistance was given to Mr. Nagel in order to simulate the DPM delivery decrease by introduction of ET-FC 21 into the blend of PMK (non filter cigarettes). The extent of the decrease (from 25.4 mg to 20.0 mg) does not allow attainment of the objectives with a reasonable quantity of ET.

+ Nagel

0000143802

Source: https://www.industrydocuments.ucsf.edu/docs/gjxk0000

REFERENCES

(1) Tobacco studies, monthly report of January 1982.

(2) Telex of Spielberg - H. to Boder - J-B.; "RL and RL-C", of December 22, 1982.

(3) Tobacco studies, monthly report of January 1982.

(4) Telex of Polack - D. to Schmidt - M. of January 22, 1982.

(5) Telex of Robert - L. to Monneron - R. "TLA, tabac suisse récoltes 1979 + 1980, January 6, 1982.

(6) Note of Völkl - G. to the file "Introduction of ETNA and IS in the tobacco lot analyses program" of March 18, 1982.

(7) Letter of Robert - L. to distribution "Recette No. 22 ETNA-BURLEY", of February 15, 1982.

(8) Memo of Hansen - M. and Monnier - P-Y. to the file "Cooked flavor RL-Europe (operations project)", of December 9, 1981.

(9) Memo of Krasna - B. to Gannon - W. "Taste evaluation" of March 30, 1982.

(10) Memo of Joseph - L. to Krasna - B. "Weightwatcher" of February 15, 1982.

0000143803

Source: https://www.industrydocuments.ucsf.edu/docs/gjxk0000

TABLE 1

		Lot 9758 RL-150 B	Lot 9760 RL-C
TOBACCO ANALYSES			
Total alkaloids	(%)	0.92	0.95
Reducing sugars	(%)	4.3	3.0
Nitrate nitrogen	(%)	0.51	0.50
Ammonia nitrogen	(%)	0.76	0.29
Phosphate	(%)	1.62	0.65
Sulfate	(%)	1.15	1.10
Propylene glycol (at m.c.)	(%)	0.16	2.14
Triethylene glycol (at m.c.)	(%)	3.26	0.03
CIGARETTE ANALYSES			
Tobacco weight	(mg/cig)	1027	963
Tobacco moisture	(%)	14.8	14.3
Firmness	(mm)	4.09	3.32
Moisture content during firmness measurement	(%)	16.8	15.9
RTD	(mm H_2O)	177	157
Diameter	(mm)	7.93	8.01
SMOKE ANALYSES (calculated per gram of burnt tobacco)			
CO	(mg/g)	29.7	24.7
NO	(mg/g)	0.60	0.49
DPM	(mg/g)	12.6	7.8
SN	(mg/g)	0.64	0.43
Puff count	(Puff/g)	10.0	9.8
HCN	(µg/g)	237	104
Aldehydes	(mg/g)	1.37	1.42

0001143804

Source: https://www.industrydocuments.ucsf.edu/docs/gjxk0000

GRAPH 1.

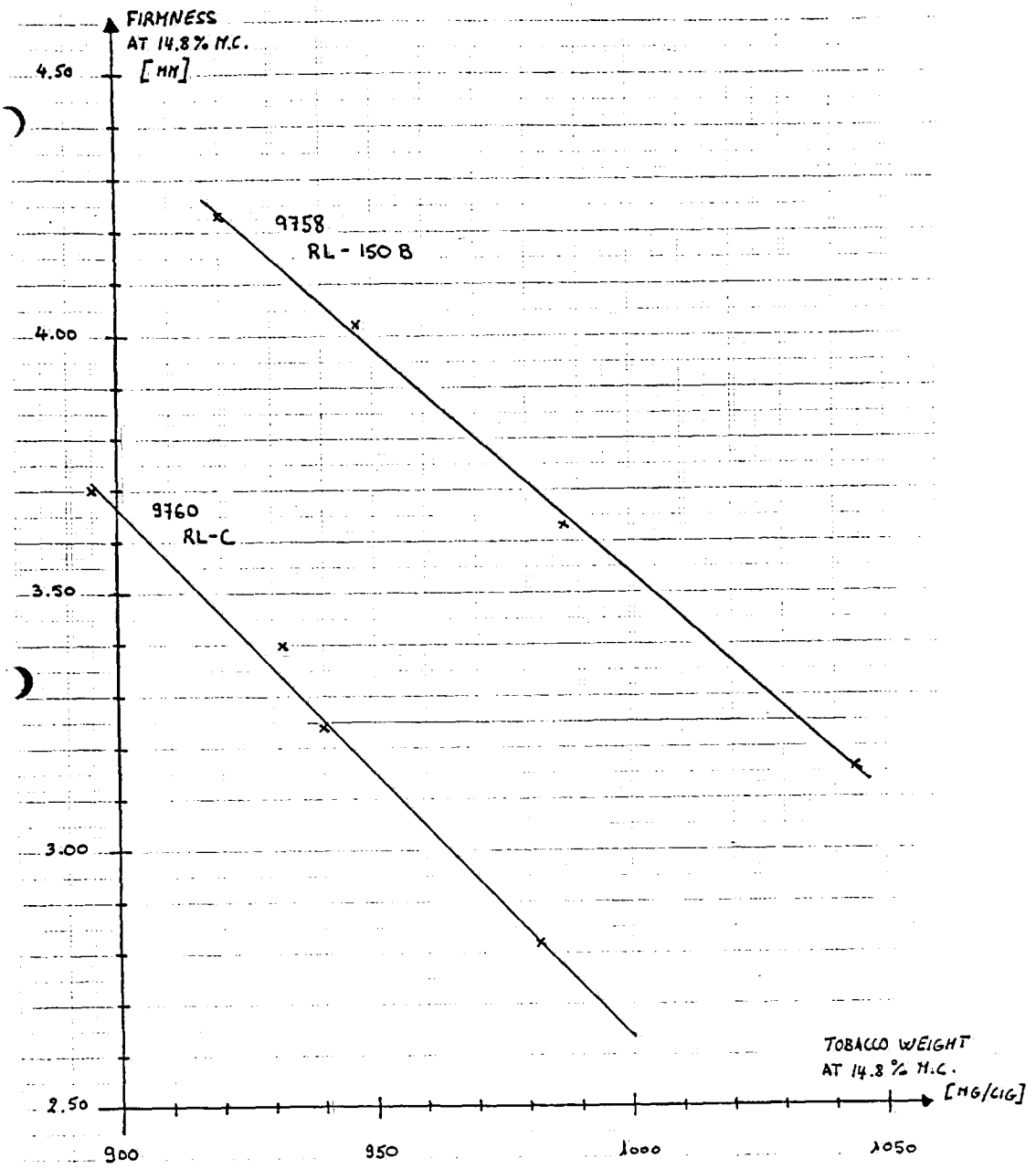

FIRMNESS VS TOBACCO WEIGHT.
(LOT 9758, 9760)

1000143805

Source: https://www.industrydocuments.ucsf.edu/docs/gjxk0000

TABLE 2

PACIFIC

STEP	0	1	2	3	4		5	6	7	8
PROTOTYPE No.	1P	4P	7P	10P	13P	15P	16P	19P	22P	25P
ETNA %	6	8	8	11	11	11	13	13	13	13
RL-C %	0	2.5	6.3	9.9	12.5	12.5	16.3	20	21.3	0
RL-150B %	10.5	10	8.5	5.7	4.3	4.3	2.8	0	0	21.3
WEIGHT mg	751	758	755	757	757	794	767	759	752	767
FIRMNESS mm	3.66	3.31	3.55	3.44	3.80	3.38	3.46	3.22	3.24	3.32
RTD mm	92	95	92	97	90	93	101	99	96	106
DILUTION %	16.4	15.9	16.8	17.1	15.4	17.0	18.8	18.1	17.8	16.5
SN mg/cig	1.14	1.15	1.14	1.10	1.18		1.06	1.08	1.07	1.14
DPM mg/cig	17.4	17.5	18.0	18.1	18.6		16.8	16.6	16.5	17.5
TPM mg/cig	19.8	20.1	20.5	20.6	21.1	19.9	19.2	18.9	18.6	20.1

0000143806

Source: https://www.industrydocuments.ucsf.edu/docs/gjxk0000

PROJECT TITLE : MATERIAL TESTING

PERIOD COVERED : FEBRUARY 1 - MARCH 31 1982

WRITTEN BY : Balliger-P (PBA)

POROUS PLUG WRAP

Miquel y Costas 30HP60

Following the preliminary tests performed with this material on the Marlboro Pan European (standard quality FU POV 40L), an industrial trial will soon be run in order to confirm the smoke yields obtained and to evaluate its performance on machines.

CIGARETTE PAPER

Schoeller & Hoesch Pela 200/03 Velin

Schoeller & Hoesch Pela 200/06 Velin

In order to increase the number of puffs of Brunette No. 3, Schoeller & Hoesch proposed the two above-mentioned alternatives which have a slightly lower amount of combustion additive (sodium acetate) than Pela 200/09 which is currently used.

After being subjected to different tests, only Pela 200/06 Velin was found to be acceptable. An increase in the number of puffs from 5.8 to 6.2 was noted and an industrial trial will be run to confirm this value.

TIPPING PAPER

Cork tipping paper standardization to US colour.

The programme for qualifying the new colour (US standard) for tipping paper is now in its final stage.

Up till now, all the papers used have been requalified on the basis of this new colour except for the perforated tipping paper Tann EPZ Z 3/60.

Analyses are currently under way to determine the substances which possibly cause the off-taste found with this paper from Tann.

0001438 07

Source: https://www.industrydocuments.ucsf.edu/docs/gjxk0000

FILTRATION MATERIAL

Rhodia 2.5/37000Y

Rhodia 3.3/43000Y

In order to widen the range of suppliers for the tow used in Marlboro Pan European, two new qualities from Rhodia were tested against the standard quality 3.4/46000I from Eastman.

Although a considerable saving was made in the quantity of paper used (7 % for 3.3/43000Y and 16 % for 2.5/37000Y), the subjective taste evaluation of cigarettes made with these materials proved negative.

PBA/edk/APRIL 1 1982

0000143808

Source: https://www.industrydocuments.ucsf.edu/docs/gjxk0000

PROJECT TITLE : CIGARETTE AND SMOKE ANALYSIS

PERIOD COVERED : FEBRUARY 25 - MARCH 24 1982

WRITTEN BY : Senehi-F (SEF)

SMOKE YIELD RESULTS ON BELGIAN BRANDS (see appendix 1)

Since the beginning of 1982, the Belgian brands have had the tar and smoke nicotine values printed on the packets.

A special study enabled us to show that the manufacturers Cinta and Landewyck systematically print significantly lower tar values than those found by QA PME (1).

PRODUCT REPORTS

Product reports were written on the following new or modified brands:

Brand	Manufacturer	Country of sale
Dunhill Menthol Mild 94/F (line extension)	Brinkmann	West Germany
Du Maurier 84/F (brand modification)	BAT	United Kingdom

REFERENCES

1 Letter from Senehi-F (March 23 1982)

SEF/edk/MARCH 26 1982

1000143809

Source: https://www.industrydocuments.ucsf.edu/docs/gjxk0000

SMOKE YIELD RESULTS ON BELGIAN BRANDS COMPARED TO PRINTED VALUES Appendix 1

RENDEMENTS EN FUMEE DES MARQUES BELGES COMPARES AUX VALEURS IMPRIMEES

Manufacturer FABRICANT	Brands MARQUES	Printed values VALEURS IMPRIMEES		Values found VALEURS TROUVEES	
		Tar Goudrons	Nicotine SN	Tar Goudrons	Nicotine SN
BAT Benelux	Boule d'Or Ultra Légère Box	1.0	0.1	0.2	0.0
	Boule d'Or Ultra Légère S.	3.8	0.4	4.7	0.33
	Boule d'Or Extra Légère	7.0	0.6	5.3	0.38
Cinta	R6	6.5	0.4	7.5	0.51
	Seitanes	6.8	0.42	8.5	0.57
	Bastos Extra Légère	8.3	0.75	11.1	0.93
	Bastos Filtre Havane	11.2	0.88	12.6	0.95
	Bastos Filtre	12.9	1.05	14.5	1.10
Gosset	Now	4.5	0.5	3.9	0.37
	St. Michel Filtre	12.0	0.9	12.7	0.78
	Mervil	12.0	0.9	12.0	0.72
	Zemir	14.0	1.0	13.9	0.94
	Camel Filtre	16.0	1.0	16.7	1.26
	St. Michel NF	19.8	1.5	21.0	1.40
International Sales	P. Stuyvesant Ultra Mild	1	0.1	1.6	0.14
	P. Stuyvesant Extra Mild	5.0	0.5	4.3	0.34
	P. Stuyvesant Luxury Length Extra Mild	8.0	0.7	8.6	0.57
	Dunhill Superior Mild	8.0	0.7	9.4	0.70
	Rothmans Légère	10.0	0.8	9.2	0.68
	P. Stuyvesant Rouge	13.0	1.0	14.4	1.09
	P. Stuyvesant Luxury Length	16.0	1.2	17.3	1.3
Jubilé	Laurens 48 S. L.	4.8	0.48	5.3	0.41
	Richmond Très Légère	6.6	0.6	6.8	0.50
	Johnson Filtre	12.8	1.0	13.0	1.06
	Cory	12.9	1.0	13.4	1.03
	Richmond Filtre	15.4	1.3	16.8	1.39
	Johnson NF	21.5	1.9	26.5	2.12
Landewyck	Kent III King Size	3.0	0.4	3.2	0.34
	Kent Golden Lights	7.2	0.7	8.3	0.65
	Kent Micronite Filter	9.9	0.8	12.6	0.86
Philip Morris* Belgium	Philip Morris Superlights	3.9	0.4	4.1	0.35
	Merit Filter King Size	7.5	0.56	7.7	0.54
Tabacofina	Belga Extra Légère	8.0	0.7	6.1	0.57
	Sprint Extra Légère	8.1	0.7	9.6	0.83
	Belga Filtre	15.8	1.3	15.0	1.20

* Les valeurs trouvées de goudron et de nicotine de nos 2 marques ont été tirées du CIR 12-1981/1-1982

The tar and nicotine values found for our two brands were taken from the CIR 12-1981/1-1982

0001143810

Source: https://www.industrydocuments.ucsf.edu/docs/gjxk0000

PROJECT TITLE : QA ANALYTICAL SERVICES

PERIOD COVERED : FEBRUARY 25 - MARCH 24 1982

WRITTEN BY : Widmer-A (ALW)

1.4. ORGANIZATION

- Sampling plan for tobacco ingredients, filter components and glues (1)

  The sampling plan was revised and adapted to today's situation. The following main modifications were introduced as compared with the last edition (2):

  - Every shipment of glue instead of every third shipment is checked with a blue sheet.

  - Every fourth instead of every third shipment of glue applied on cigarettes is checked by subjective evaluation (Panel D).

  - Incoming control of glues, charcoal, silicagel and cocoa peels is carried out by the QA lab in Onnens.

  - Supplies of AC-bases are checked on the basis of batches produced in Richmond.

  - All supplies of honey are submitted to a reinforced incoming control.

2.1. CASING KITCHEN

- PMS-AC

  The preparation procedure for this new solution was established (3).

5.1. PRODUCT QUALITY

- Tobacco ingredients, solutions and filter plugs used for project TENNIS were submitted to analytical checking. All the products were found to be within the specifications or comparable to the standards (4).

0000143811

Source: https://www.industrydocuments.ucsf.edu/docs/gjxk0000

5.5. ROUTINE AND SEMI-ROUTINE ANALYSES (17/02 - 17/03)

	Analytical Services	Production Control	Incoming Control
Physical methods	200	3700	82
Conventional methods	620	140	19
Instrumental methods	180	-	-

REFERENCES

1 "Plan d'échantillonnage pour additifs et colles" from Widmer-A (February 25 1982)

2 "Plan d'échantillonnage pour additifs et colles" from Widmer-A (November 19 1980)

3 Letter from Schwarb-A to the Casing Kitchen (March 3 1982)

4 Letter from Schwarb-A to Frattolillo-A (March 9 1982)

ALW/edk/APRIL 6 1982

0001143812

Source: https://www.industrydocuments.ucsf.edu/docs/gjxk0000

PROJECT TITLE	:	COMPUTER AND INSTRUMENTATION SUPPORT GROUP
PERIOD COVERED	:	23 FEBRUARY - 22 MARCH 1982
WRITTEN BY	:	Thévoz-M. (MIT)

Automation of the Smoking Laboratory (Project COLDAC)

The final version of the data base, whose structure has just been established, will be installed on the HP 1000. The analytical values of about 100 recent analyses will be introduced manually into the new data base layout for specialized simulation work. The latter will enable us to optimize the time of answering during querying and the preparation of complete reports. At present the programmes for editing a standard analysis sheet for routine analyses and trials are being completed. Our group is now developing special programmes for editing the TLA reports.

The results of the automatic preparation of bar codes (code INTERMEC 39) on the graphic printer have proved to be excellent. The programmes written in FORTRAN, whose purpose is to check thoroughly the HP 2631 G printer, permit 8 stickers a minute to be produced for one 7-position alphanumerical sample code. The stickers produced by the printer have also a written code with a 19-character line for a comment which facilitates product identification.

In conjunction with the users, we are currently studying a system allowing automatic recognition by the computer of the completed analytical sheets. The end of analysis function is obtained by direct comparison of the list of measurements which have to be made for a given brand with the presence of a certain number of results for the same brand in the data base. The reference list is read directly in the specification file at the time of sample preparation in the laboratory.

The presence of an end of analysis function, controlled by the computer, permits more efficient data exchange with the EDP centre. The head of the laboratory will also be able to check more precisely how far the analyses of his laboratory's samples have progressed.

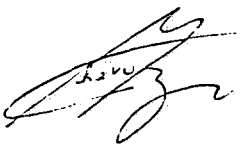

MIT/jud/MARCH 18, 1982

FRN6789 TEST PROGRAMME LAB1

Example of a sticker with 19-character line for a comment

0001143813

Source: https://www.industrydocuments.ucsf.edu/docs/gjxk0000

PROJECT TITLE : LIBRARY 3

PERIOD COVERED : MARCH 1982

WRITTEN BY : Badstuber-A. (ANB)

STAIRS

All our standard laboratory methods have been introduced in STAIRS. They are made available to the authorized users.

A. Badstuber

ANB/jud/APRIL 1, 1982

0001143814

Source: https://www.industrydocuments.ucsf.edu/docs/gjxk0000

PROJECT TITLE : LEGISLATION

PERIOD COVERED : MARCH 1982

WRITTEN BY : Fink-W.

DRAFT OF A LABOUR PROTECTION LAW

In December 1981 the Federal Ministry of Labour and Social Affairs in Germany presented a draft of a Labour Protection Law. This law is intended "to consolidate existing labour protection laws and to base labour protection on modern principles".

It is envisaged that the law should come into force on 1.1.1985.

Paragraph 36 of the draft is worded as follows :

"Paragraph 36 Protection of NON-Smokers

> The employee can demand that the employer ensures that other employees do not smoke in the vicinity of his workplace in a manner which inconveniences him".

This regulation applies not only to rest rooms, but also to every workplace (including outdoors) and to employees' communal accommodation, for which the draft likewise contains regulations.

Paragraph 36 is contained in the section "Employees' Rights and Obligations", that is to say it gives the individual employee a claim on the employer, who, in the sense of this draft, is generally understood as a guarantor of labour protection.

The regulation in this draft law for the protection of non-smokers goes far beyond any serious regulation proposals, which have hitherto been discussed in case law, science and politics. The subjective feeling of an employee who feels inconvenienced by tobacco smoke is raised as the sole criterion relevant in law, and this is linked to a corresponding claim on the employer to issue a smoking prohibition. If this regulation were in fact passed, the interests of our industry would be seriously impaired.

WAF/jig/MARCH 22, 1982

1000143815

Source: https://www.industrydocuments.ucsf.edu/docs/gjxk0000

T S. OSDENF

1982

0000143816

Source: https://www.industrydocuments.ucsf.edu/docs/gjxk0000